	Project Name: _____ **Location:** _____ **Model#:** _____ **Phone#:** _____ **Qty:** _____ **Date:** _____	**NOTES:**
MBF8002	**Upright Freezer**-Top Mount Series	

MBF8002 Two door freezer

- Top mount compressor units
- Exterior & interior stainless steel construction
- Dixell digital temperature control system
- Heavy duty Embraco compressor
- Self-closing and stay open door
- Efficient refrigeration system
- Round corner design
- Recessed door handle
- Standard safety door lock
- Magnetic door gaskets
- Pre-installed castors
- Pre-installed shelves
- 155lbs loading capacity per shelf

Model	MBF8002						
Exterior Dimensions	Interior Dimensions	Packing Dimensions	Shelf QTY	Net Weight(lbs)	Gross Weight(lbs)	AMPS	Voltage (v/hz/ph)
51.7×33.3×83.9	47×25×60.6	53×33.9×85	6	408	430	12	115/60/1
Power (W)	Power Consumption (kw/24h)	Compressor Power(hp)	Capacity(Cu.Ft.)	Refrigerant Amount (oz)	Refrigerant	Defrost Power(w)	
1170	10	3/4	44.5	19.4	R-404a	800	

For Best Results of Food Preservation, We Recommend Setting Your Freezer Between 0 ˚F - -8˚F

www.Atosausa.com

We Make The Kitchen Better

Upright Freezer-Top Mount Series | Two door freezer | MBF8002

Terms and Conditions

2 YEAR WARRANTY

All claims for parts or labor must be made directly through Atosa. All claims must include: model number of the unit, the serial number, proof of purchase, date of installation, and all pertinent information supporting the alleged defect. In case of compressor replacement under warranty, either compressor or compressor tag must be returned to Atosa along with above listed information. **Failure to comply with warranty policies will result in voiding claims.**

Two Year Parts & Labor Warranty

Atosa warrants all new refrigerated components, such as the cabinet and all parts, to be free from defects in materials or workmanship. Atosa's obligation under this warranty is limited to a period of two (2) years from the date of original installation or 27 months after shipment date from Atosa, whichever occurs first. All part s covered under this warranty that are defective within two (2) years of original installation or twenty seven (27) months after shipment date from manufacturer, whichever occurs first, are limited to repair or replacement (including labor charges, of defective parts or assemblies). The labor warranty shall include standard straight time labor charges only and reasonable travel time, as determined by Atosa.

Additional Three Year Compressor Warranty

In addition to the two (2) year warranty stated above, Atosa warrants its sealed compressor to be free from defects in both material and workmanship under normal and proper use and maintenance service for a period of three (3) additional years from the date of original installation, but not to exceed five (5) years. Compressors that have been determined to be defective from Atosa within this extended period will be either repaired or replaced with a compressor or compressor parts of similar design and capacity according to Atosa's discretion. The three (3) year extended compressor warranty applies only to sealed parts of the compressor and does not apply to any other parts or components. This includes, the cabinet, paint finish, temperature control, refrigerant, metering device, motor starting equipment, fan assembly, and other electrical components, etc.

404A / 134a Compressor Warranty

The five-year compressor warranty detailed above will be void if the following procedure is not carefully adhered to:

1.This system contains R404A or R134a refrigerant and lubricant. The lubricant has rapid moisture absorbing qualities.

2.Drier replacement is very important and must be changed when a system is opened for servicing.

3.Micron level vacuums must be achieved to insure low moisture levels in the system.

4.Compressor must be obtained through Atosa, unless otherwise specified in writing, through Atosa's warranty department.

What is Not Covered by This Warranty

Atosa's sole obligation under this warranty is limited to either repair or replacement of parts, subject to the additional limitations below. This warranty neither assumes nor authorizes any person to assume obligations other than those expressly covered by this warranty.

NO CONSEQUENTIAL DAMAGES: ATOSA IS NOT RESPONSIBLE FOR ECONOMIC LOSS; PROFIT LOSS; OR SPECIAL, INDIRECT, OR CONSEQUENTIAL DAMAGES, INCLUDING WITHOUT LIMITATION, LOSSES, OR DAMAGES ARISING FROM FOOD OR PRODUCT SPOILAGE, REGARDLESS OF WHETHER OR NOT THEY RESULT FROM REFRIGERATION FAILURE.

WARRANTY IS NOT TRANSFERABLE: This warranty is not assignable and applies only in favor of the original purchaser/user to whom delivered. ANY SUCH ASSIGNMENT OR TRANSFER SHALL VOID THE WARRANNTIES HEREIN AND SHALL VOID ALL WARRANTIES, EXPRESS OR IMPLIED, INCLUDING ANY WARRANTY OF MERCHANTABILITY OR LABOR COVERAGE FOR COMPONENT FAILURE OR OTHER THE WARRANTY PACKET PROVIDED WITH THE UNIT.

ALTERATION, NEGLECT, ABUSE, MISUSE, ACCIDENT, DAMAGE DURING TRANSIT OR INSTALLATION, FIRE, FOOD, OR ACTS OF GOD: Atosa is not responsible for the repair or replacement of any parts that are determined to have been subjected after the date of manufacture to alteration, neglect, abuse, misuse, accident, damage during transit or installation, fire, flood, or act of God.

IMPROPER ELECTRICAL CONNECTIONS: Atosa IS NOT RESPONSIBLE FOR THE REPAIR OR REPLACEMENT OF FAILED OR DAMAGED COMPONENTS RESULTING FROM ELECTRICAL POWER FAILURE, THE USE OF EXTENSION CORDS, LOW VOLTAGE, OR VOLTAGE DROPS TO THE UNIT.

THE TWO (2) YEAR PARTS & LABOR WARRANTY AND THE ADDITIONAL THREE (3) YEAR COMPRESSOR WARRANTY ARE AS DESCRIBED ABOVE. THESE WARRANTIES ARE EXCLUSIVE AND IN LIEU OF ALL OTHER WARRANTIES, INCLUDING IMPLIED WARRANTY AND MERCHANTABILITY OR FITNESS FOR A PARTICULAR PURPOSE. THERE ARE NO WARRANTIES WHICH EXTEND BEYOND THE DESCRIPTION ON THE FACE HEREOF.

Outside U.S. and Canada: This warranty does not apply to areas outside the continent of the United States. Atosa is not responsible for any warranty claims made on products sold or used in such areas.

In some cases, a 25% restocking fee may be charged to a buyer for returned items.

Atosa may at any time modify our equipment in order to provide and insure a uperior product. Change is sometimes necessary to keep up with today's high standards in our industry. Atosa reserves the final interpretation of all public materials.

PLAN VIEW

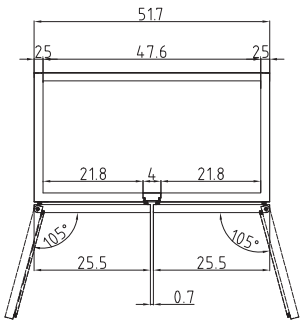

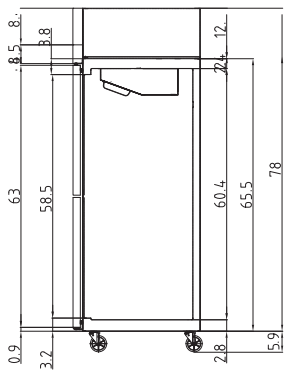

SIDE VIEW

2 years warranty on all parts & labor (U.S.A only)
5 years warranty on Compressor (U.S.A only)